THROWFLAME

ARC User Manual

Next Level **Firepower**

READ THE INSTRUCTIONS AND WARNINGS IN THIS MANUAL CAREFULLY BEFORE USING THE ARC. DO NOT DISCARD THIS MANUAL.

This instruction manual should always accompany this product and be transferred with it upon sale, or when the product is loaned or presented to another person.

MADE IN USA

Built to last

throwflame.com

Table of Contents

Safety Guidelines	3
Component Identification	4
Operation	5
Maintenance and Storage	8
Troubleshooting	9
About ThrowFlame	10
Contact Information	Back Cover

Safety Guidelines

While most of these guidelines are common knowledge, it is important to review these items to maintain the highest level of safety. Read all instructions before operating the product. Failure to follow all instructions listed below may result in burns, unintentional fires, and/or serious injury or death. Review these instructions before each use.

1. Keep out of reach of children and stored in a secure location.
2. Always keep the ARC pointed in a safe direction.
3. Visually inspect the ARC to ensure no components were damaged during shipping. If you suspect or notice any leakage (through sight, smell, or otherwise), discontinue use immediately and contact us for support.
4. Always keep the ARC in the off position and keep objects away from the trigger until ready to shoot.
5. Know your target and what is beyond it.
6. Only operate the ARC outdoors in a well-ventilated area.
7. Never use alcohol or drugs while operating the ARC.
8. The ARC must be on the ground and away from open flames during refueling. As with filling any fuel container, there is a risk of static charge build-up.
9. Keep all body parts away from the nozzle and electrodes during use.
10. Do not operate in strong wind. Be mindful of wind direction and always try to fire in the same direction as the wind. Do not fire into a headwind.
11. Leftover fuel on the shroud has the ability to drip from the ARC at any time. Be sure the ARC is directed away from people and any flammable surfaces.
12. Do not fire the ARC at higher than a 45-degree angle- the risk of fuel dripping onto the operator increases significantly.
13. Use personal protective equipment and fire-resistant gear. Keep a fire extinguisher ready nearby.
14. The nozzle area, shroud, and electrodes become hot and aflame during use. Do not touch these surfaces, they may burn.
15. Do not transport while filled with fuel.
16. Fully charge the ARC before first use. Always charge in a fireproof location.
17. Keep the ARC out of the rain and other harsh elements. If the inside gets wet, allow it to completely dry before using.

Battery Safety

18. Do not use or expose the ARC to temperatures higher than 120°F or lower than 0°F.
19. Store in a dry, cool location away from flammable objects.
20. Do not charge below 32°F. Do not leave the ARC unattended while charging.

Component Identification

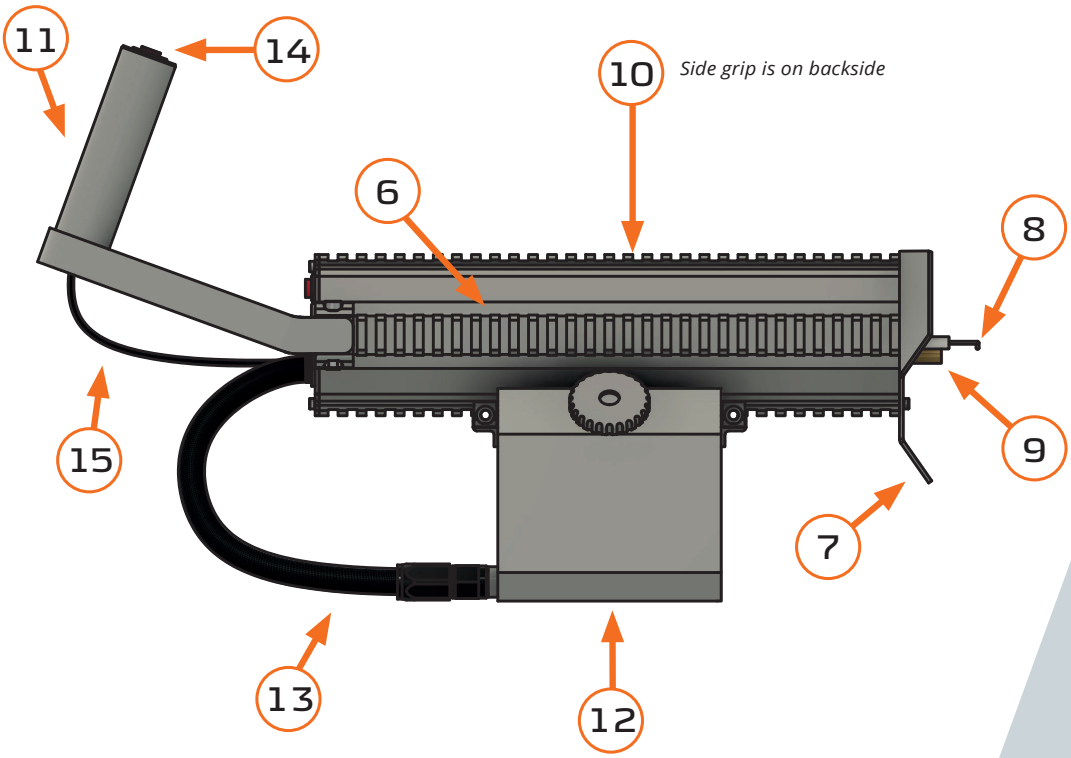

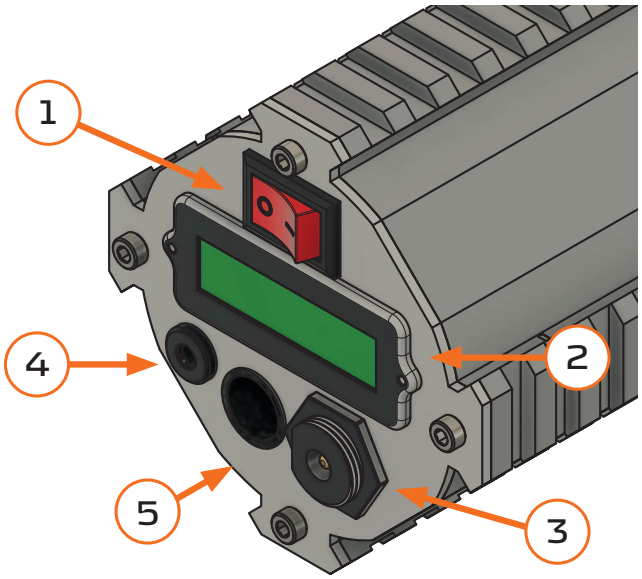

Power switch	1
Battery Display	2
Charger Port	3
3.5mm trigger port	4
Back Plate	5
Body Quad Rail	6
Front plate	7
Arc ignitor electrodes	8
Nozzle	9
Side grip	10
Rear grip	11
Fuel Tank	12
Fuel Line	13
Trigger push button	14
Trigger cable	15

Operation

1 Charge Up

The ARC comes with a factory storage charge, it is best to fully charge the battery before use. To charge, simply plug in the included charger. The ARC will automatically begin charging. To check the charge status, turn on the power switch to illuminate the display.

ARC Instruction Video

**Attention. Read the Safety Guidelines on page 3 for battery warnings and charging best practices.*

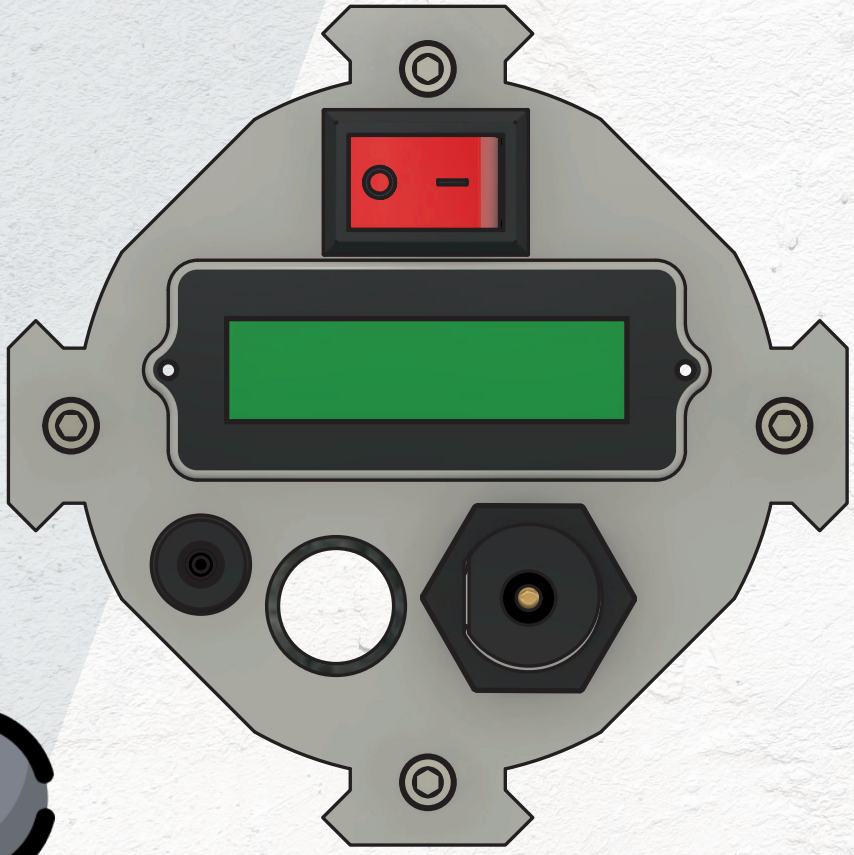

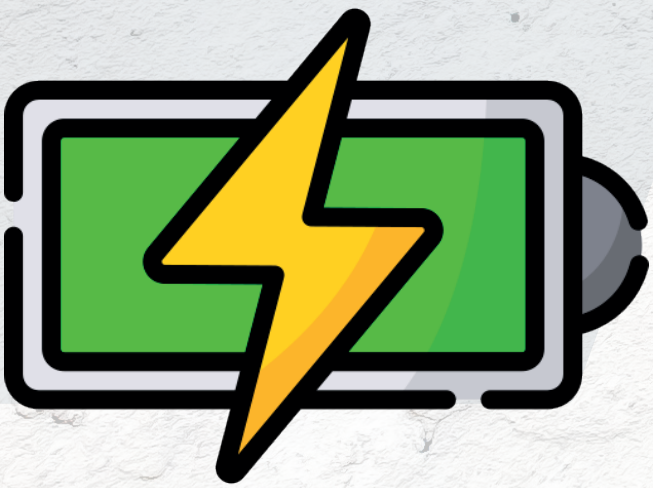

Operation

2 Attach Grip(s)

Attach the side and rear grips using the included 4mm hex wrench. The grips can be adjusted to any position that the user prefers. Then plug in the trigger cable to the 3.5mm port on the back plate.

*The included side grip is ambidextrous.

Next, use the included 4mm hex wrench to adjust the fuel tank to the middle position

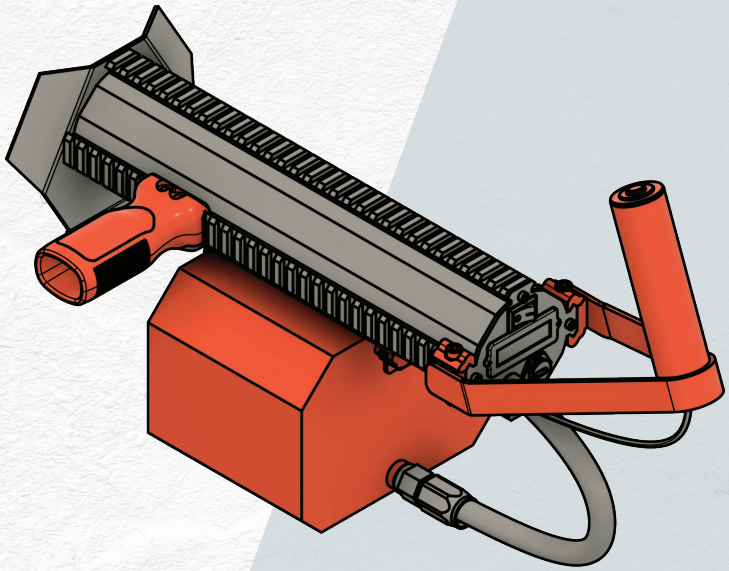

3 Fill Up

On a flat grounded surface, remove the fuel tank cap by unscrewing it counter-clockwise. Then fill with fuel, and be careful not to overfill. Reinstall the fuel cap by screwing it clockwise until hand tight. Be sure to wipe up any spilled fuel.

Compatible Fuels:

- Gasoline (any octane/ethanol level). Quick/ Easy and makes for a nice bright flame.
- Gasoline/Diesel mix (up to 50% diesel).

  A gasoline-diesel mixture yields a slightly smaller flame and longer burn time. Too high of a diesel ratio will cause inconsistent ignition since diesel is harder to ignite.

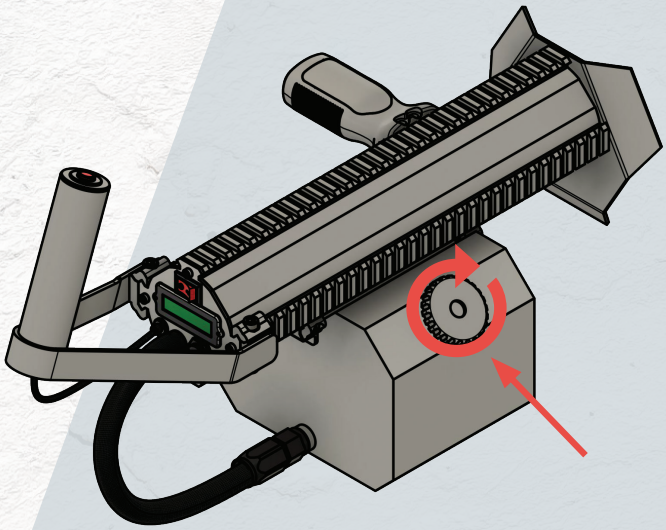

**Note Unlike our X15 and XL18, the ARC is NOT napalm compatible. Only liquid fuels can be used.*

Diesel fuel can freeze. Do not store or use the ARC with diesel in below-freezing temperatures.

Operation

4 Throwflames!

When ready to fire, turn on the ARC's power switch. Aim the ARC in a safe direction and press the trigger button. While the trigger button is depressed, fuel will begin spraying from the nozzle and the arc electrodes will ignite the fuel causing a flaming stream.

Think of the power switch as a safety. Leave the power switch off until ready to fire. When your ARC is fueled up, turn on the power when you are in a safe area and ready to fire.

5 When you are finished

When you are finished, turn off the power switch. During and after use remember the front plate, nozzle and electrodes can become aflame and will be hot. Avoid touching these.

CAUTION HOT SURFACE

Maintenance and Storage

The ARC is designed to be generally maintenance-free. All components are rated for industrial use and designed for long-term operation. There are just a few things to keep in mind:

- Keep the fuel tank and lines clean and free of debris
- Inspect for any leaks before each use. Keep an eye out for cracks in the hose or damaged threads
- To remove carbon buildup, occasionally clean off the electrodes with rubbing alcohol or brake cleaner
- Optimal long-term battery storage charge: 30%-70%
- Keep the ARC stored off, empty, out of the elements, and in a secure area away from pets, children, and any other unauthorized persons. After each use, wipe equipment with a clean cloth.
- Contact us directly at **info@throwflame.com** for any questions or replacement parts. We are happy to help.

Legal to own

In the USA Flamethrowers are federally unregulated and not even considered a firearm (ironic) by the BATF. There is no need for any NFA tax stamps, weapons licensing, or even an FFL dealer. It's the purchaser's responsibility to ascertain that ownership and or use does not violate any state or local laws or regulations. Check the FAQ page on Throwflame.com for the latest information on international deliveries.

Troubleshooting

THROWFLAME

Power switch is ON but the display is OFF	If the ARC still shoots: the display is bad or there is a loose connection. If the ARC doesn't shoot: • The battery is too low, charge it up. • A cable is disconnected
The pump sounds like it's running, but nothing comes out	• Out of fuel • The fuel pump, hose, or nozzle is obstructed. • The pump is faulty
The fuel stream isn't lighting consistently	• Bad fuel or too much diesel. Try just gasoline • The electrodes are misaligned. Adjust them. • The electrodes are dirty. Wipe them off.
It won't charge	• Check to ensure the outlet works • Make sure the charge port is free of debris • Ensure the charger is fully plugged in
Fuel drips from the nozzle during/after use.	That's normal. Fuel residue remains in the nozzle and may drip out.
The power switch is ON but the trigger button doesn't do anything	• Check the trigger cable connection

Mount It to Anything

Quad rails mean you can stick the ARC Flamethrower just about anywhere or on anything. Attach it to a tripod, a rifle, a vehicle, or even a robot dog.

WE'VE GOT YOU COVERED

★★★★★

Ridiculously Modular

So much rail space, I can deck it out with any of my rifle accessories. With lasers, a flashlight, and a sling it feels straight out of ALIEN.

★★★★★

So Much Fun!

This is, by far, the greatest gift I've ever received.

// Josh H.

Modular

Full-length picatinny rails along the body allow you to adjust grip and fuel tank position to your liking. Further, customize your flamethrower by attaching lights, grips, optics, lasers, and any other firearm-related accessory. The options are endless.

Visit Throwflame.com to shop popular ARC attachments

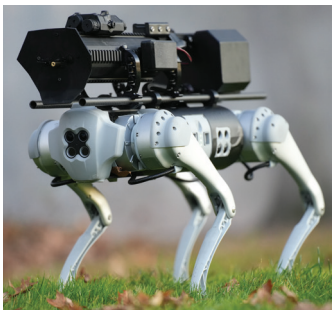

THROWFLAME

★★★★★

Good job!

Good job on the customer service. I will make sure to share that with anybody that's interested in the flamethrower.

// Dustin M.

★★★★★

Extraordinary!

Thanks for your excellent customer service!

// Barry K.

Contact Us!

info@throwflame.com

Cleveland, Ohio

FAQ

YOUTUBE
@THROWFLAME

INSTAGRAM
@THROWFLAME

FACEBOOK
@THROWFLAME

Tag Us #Throwflame

throwflame.com

THROWFLAME